SERIES LG2-T ARMORED TUBULAR LIQUID LEVEL GAUGE W. 90° CONNECTIONS

APPLICATIONS:

For low to medium pressure applications up to 500 psig, including oil or fuel storage tanks, cooling tower water tanks, and boiler feedwater tanks.

FEATURES

The Series LG1-T Series Level Gauge features 90 degree connections for ease of installation. The Gauge is fitted with inline 1/4" FNPT vent and drain connections. Vent and drain connections are inline for routine maintenance of the level gauge.

The centerline dimensional tolerance is ± 1/16". This assures that the gauge will fit the mounting connection of the tank.

The sight tube of the Series LG1-T Level Gauge is totally protected. Three sides of the gauge are enclosed with a metal frame, while the face of the gauge is protected with a polycarbonate shield. This shield can be custom calibrated to read tank volume or any other calibration. Refer to the Shield Specifications page (pg 12) to see the assortment of standard shield options.

The gauge frame is available in carbon steel or 304 stainless steel. A wide variety of wetted materials are available, including carbon steel, 316 stainless steel, alloy 20, Hastelloy C-276, PVC, CPVC, Kynar, and high density polyethylene.

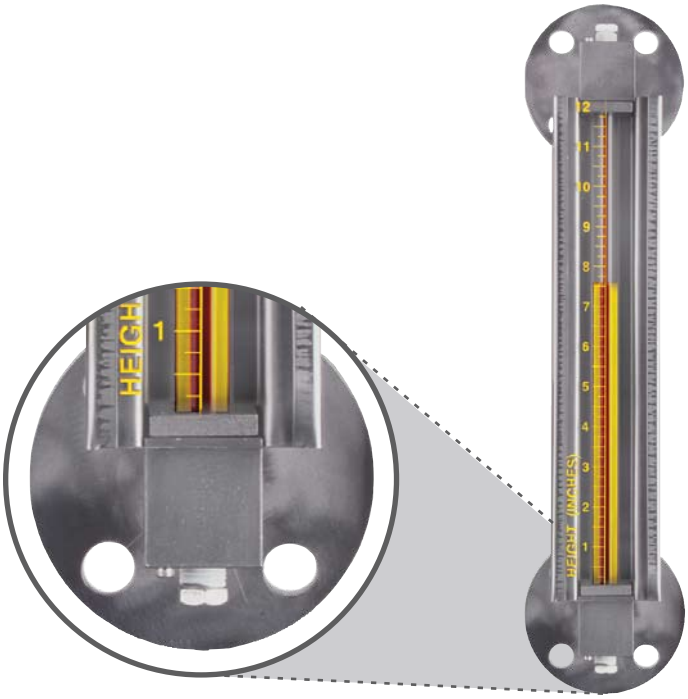

Optional Flange Connection

J.G. PAPAILIAS CO., INC. - 245 PEGASUS AVENUE, NORTHVALE, NJ 07647 (201)767-4027, FAX(201)767-7870, SALES@PAPAILIAS.COM, WWW.PAPAILIAS.COM

SERIES LG2-T LEVEL GAUGE WITH THREADED PROCESS CONNECTIONS

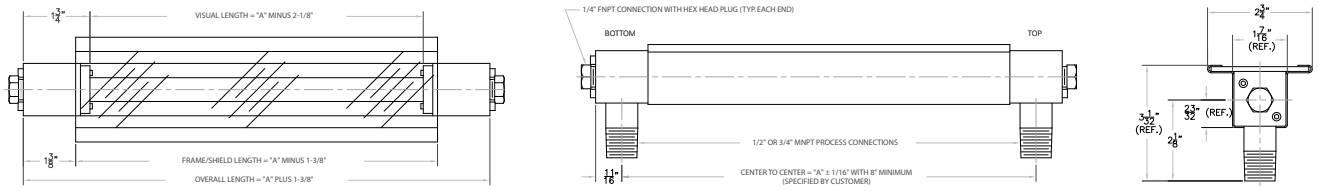

SERIES LG2-F LEVEL GAUGE WITH OPTIONAL FLANGED CONNECTIONS

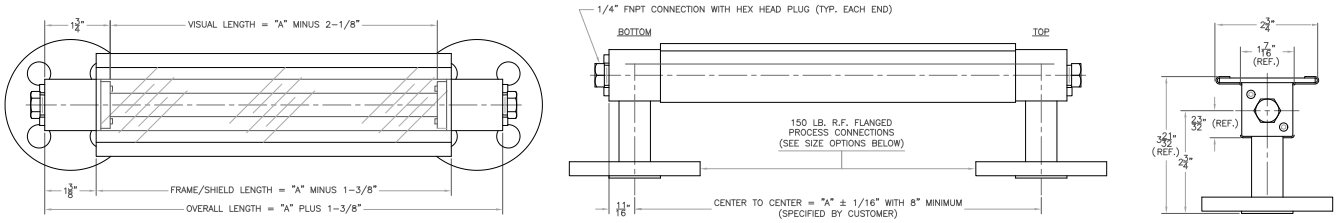

ORDERING SYSTEM
Series LG2-T Level Gauge

REQUESTED BY: _____ COMPANY: _____

ADDRESS: _____ CITY: _____ STATE: _____ ZIP: _____

PHONE: _____ FAX: _____ EMAIL : _____

LG2- [ ] — [ ] — [ ] — [ ]

Gauge Style
LG2-T= 90° MNPT
LG2-F - 90° Flanged

Process Connections
M50=1/2" MNPT
M75=3/4" MNPT
F50=12" FNPT
F75=3/4" FNPT
FL50=1/2" FLANGE
FL75=3/4" FLANGE
FL1.0=1" FLANGE
FL1.5=1.5" FLANGE
FL2.0=2" FLANGE

Center to Center Dimension (inches)

Material of Construction
C=Zinc Plated Carbon Steel
A=Stainless Steel
PC=PVC Wetted Parts w/Carbon Steel Frame
PS=PVC Wetted Parts w/Stainless Steel Frame
Other (Please Specify)

Seal Material
V=Fluorocarbon
A=Aflas
B=Buna-N
T=FEP Encapsulated Silicone
E=Ethylene Propylene

[ ] — [ ] — [ ] — [ ] — [ ]

Shield Options*
L=Clear Polycarbonate
H=Height Scale
RH=Rate Height Scale
MH=Metric Height Scale
MRH=Metric Rate Height Scale
M=Expanded Metal Guard

Sight Tube Options**
GS=5/8" O.D. Glass (Standard)
RL=5/8" O.D. Redline Glass

Maximum Working Pressure (PSIG)

Maximum Operating Temperature (°F)

Steam
S=Steam Application
NS=Non-Steam Application

- Example Order Number: LG1-T-M50-68-PS-T-MH-GS-150-120-NS

* See page 12 for shield descriptions

** Based on application data provided, PAPAILIAS will select the appropriate sight tube material, i.e. high pressure glass.

MODEL LG2-T-M

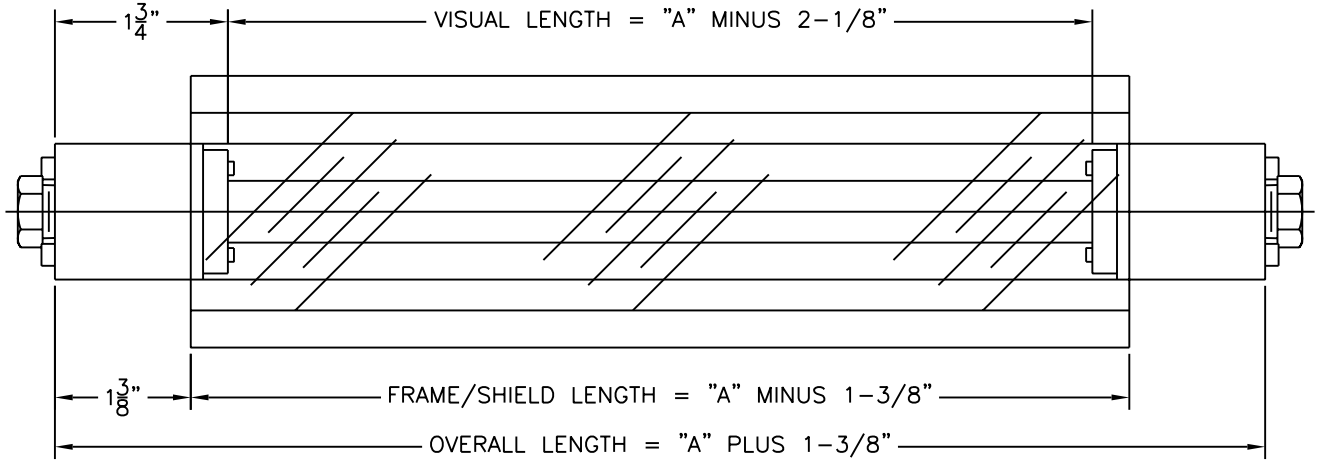

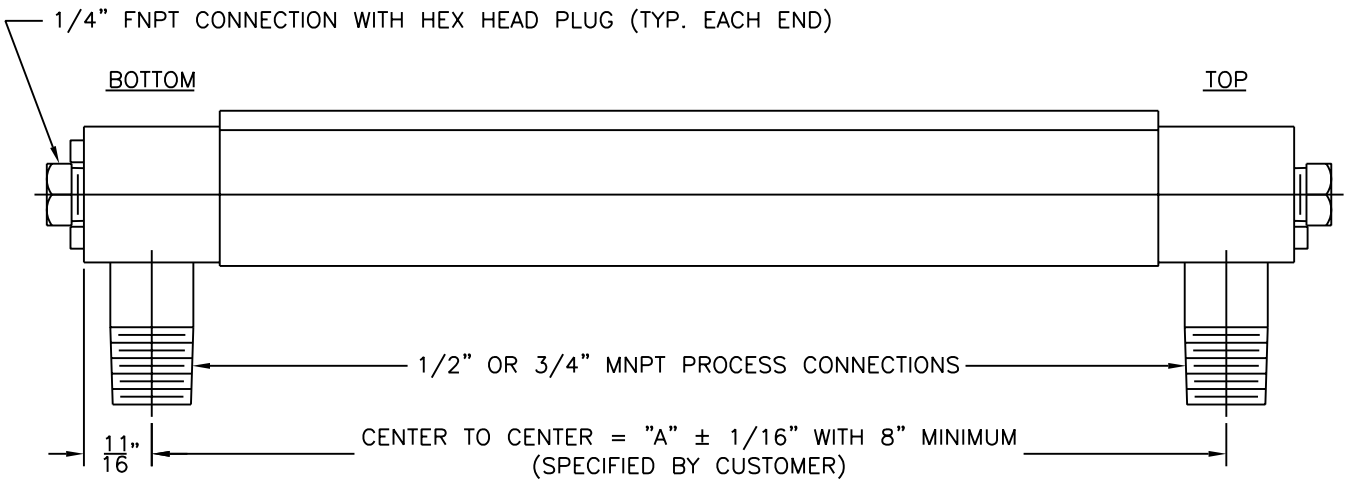

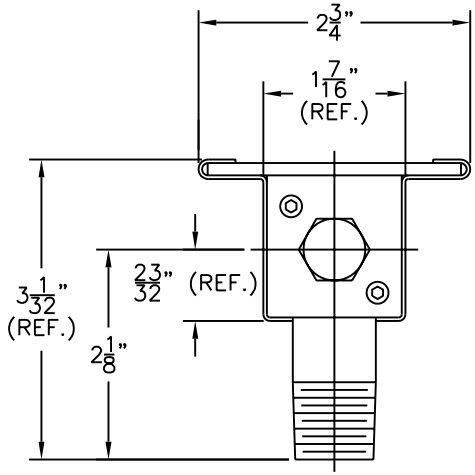

COPYRIGHT 2006 - J.G. PAPAILIAS CO., INC. - ALL RIGHTS RESERVED

REV.	DATE	BY	ECN	EXPLANATION:

PAPAILIAS INCORPORATED
245 PEGASUS AVENUE, NORTHVALE, NJ 07647

ARMORED TUBULAR LIQUID LEVEL W. 90° CONN.
(OUTLINE DRAWING) SERIES LG2-T-M
WITH NPT MALE PROCESS CONNECTIONS

DATE: 12/11/06	SHEET: 1 OF 1	DRAWING NUMBER
DRN. BY: RPS	CHKD. BY: DS	LG2-T-M
SCALE: NTS	REVISION:	

MODEL LG2-T-FL

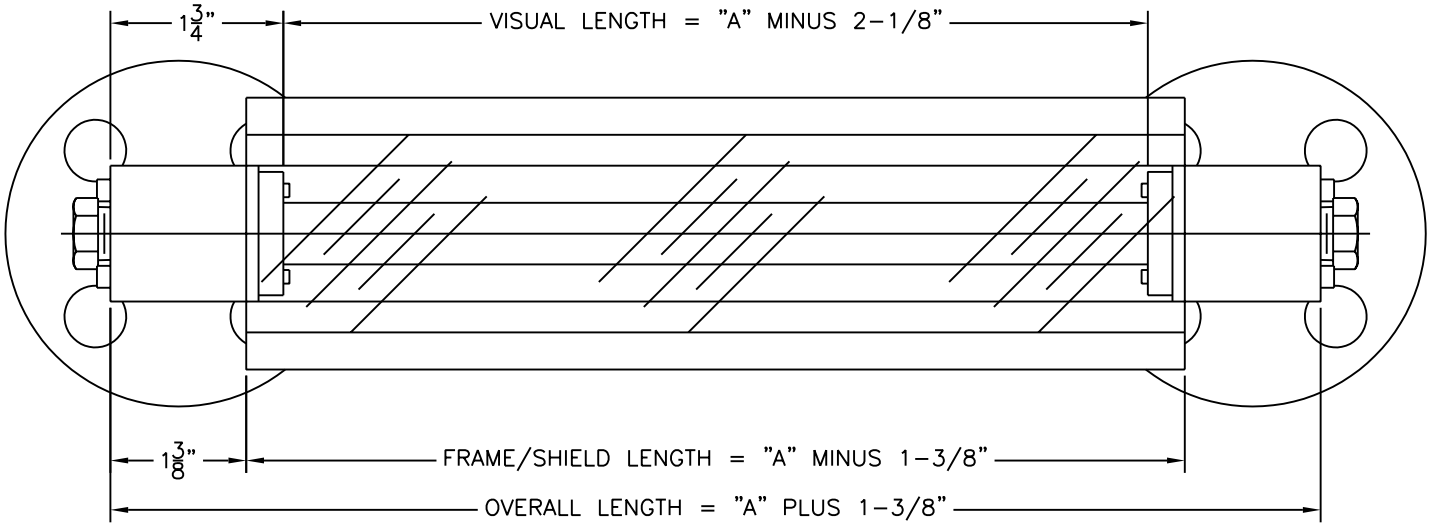

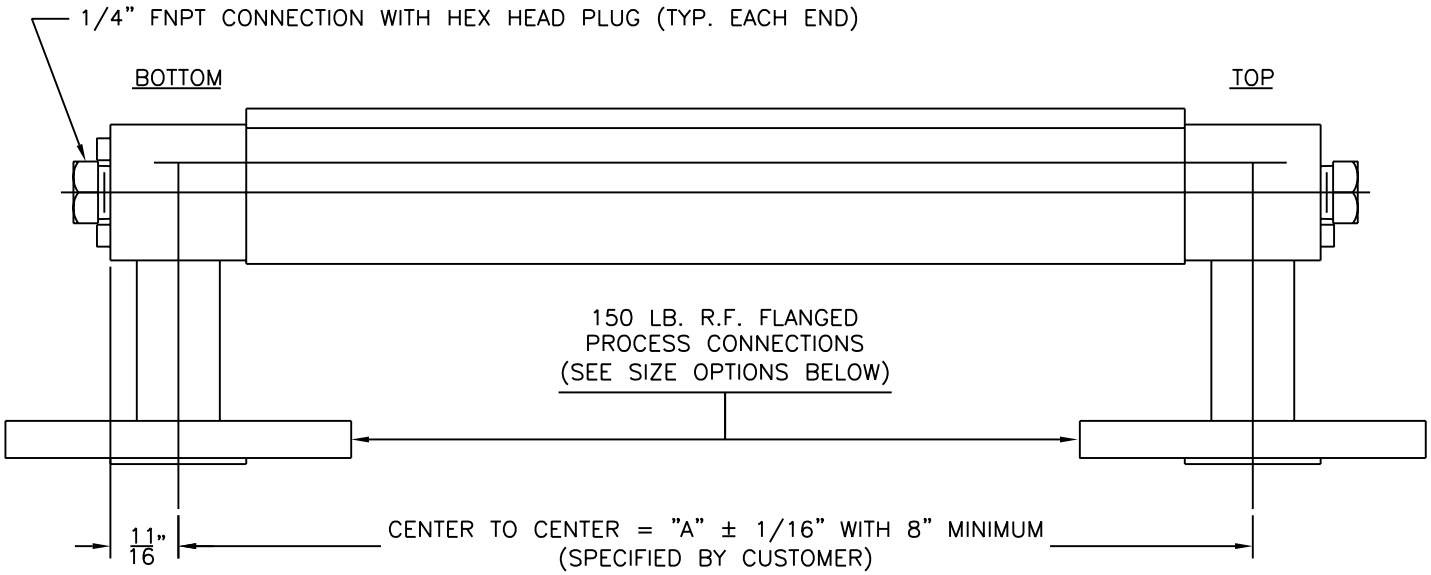

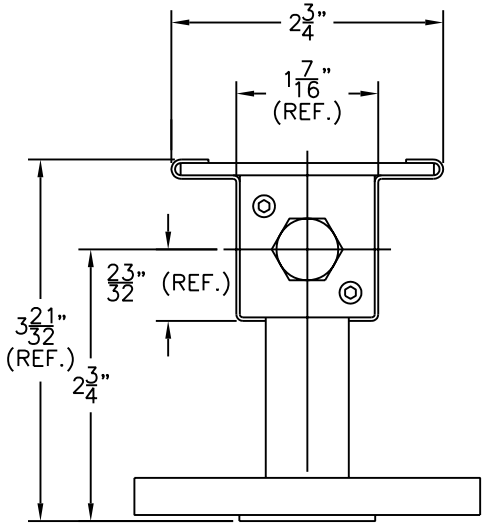

DIMENSION ARE FOR REFERENCE PURPOSES ONLY AND ARE SUBJECT TO CHANGE AT ANY TIME WITHOUT NOTICE.

COPYRIGHT 2006 - J.G. PAPAILIAS CO., INC. - ALL RIGHTS RESERVED

GAUGE MODEL NUMBER / PROCESS CONNECTION SIZE:

LG2-T-FL50 (1/2" 150 LB. R.F. PIPE FLANGE)
LG2-T-FL75 (3/4" 150 LB. R.F. PIPE FLANGE)
LG2-T-FL10 (1" 150 LB. R.F. PIPE FLANGE)
LG2-T-FL15 (1-1/2" 150 LB. R.F. PIPE FLANGE)
LG2-T-FL20 (2" 150 LB. R.F. PIPE FLANGE)

REV.	DATE	BY	ECN	EXPLANATION:

PAPAILIAS INCORPORATED
245 PEGASUS AVENUE, NORTHVALE, NJ 07647

ARMORED TUBULAR LIQUID LEVEL W. 90° CONN.
(OUTLINE DRAWING) SERIES LG2-T-M
WITH 150# FLANGED PROCESS CONNECTIONS

DATE: 12/11/06	SHEET: 1 OF 1	DRAWING NUMBER
DRN. BY: RPS	CHKD. BY: DS	LG2-T-FL
SCALE: NTS	REVISION:	

MODEL LG2-T-FL

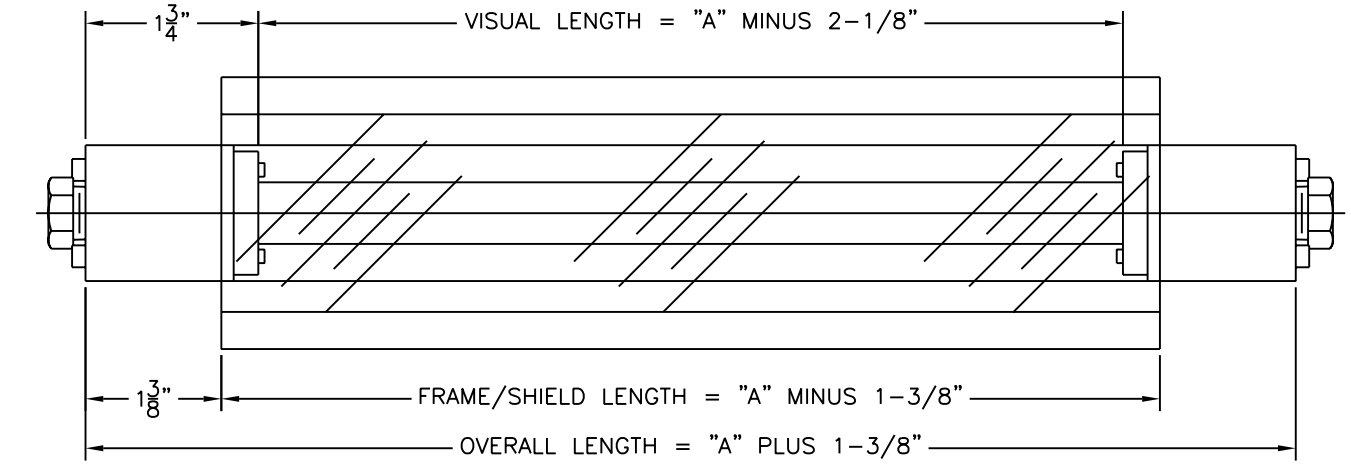

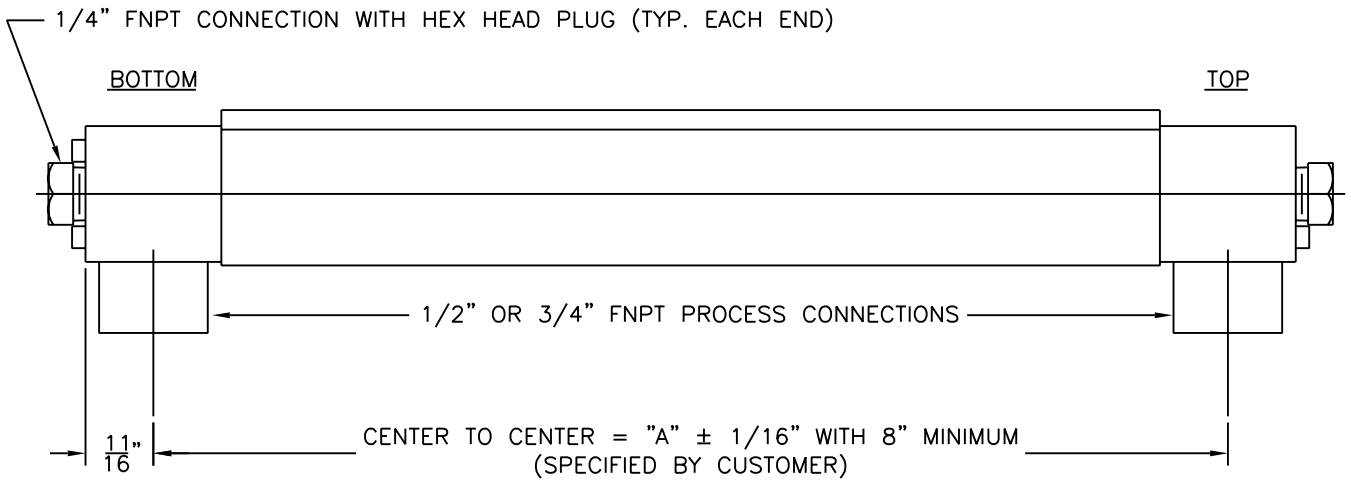

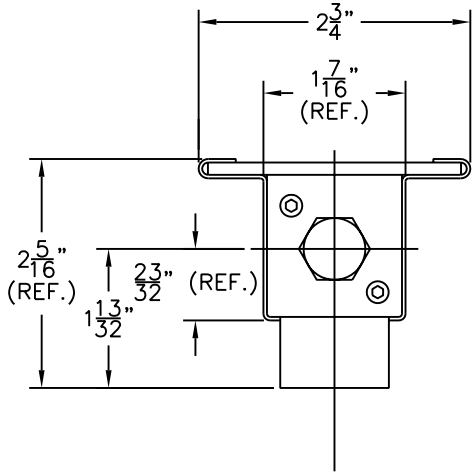

DIMENSION ARE FOR REFERENCE PURPOSES ONLY AND ARE SUBJECT TO CHANGE AT ANY TIME WITHOUT NOTICE.

COPYRIGHT 2006 - J.G. PAPAILIAS CO., INC. - ALL RIGHTS RESERVED

REV.	DATE	BY	ECN	EXPLANATION:

PAPAILIAS INCORPORATED
245 PEGASUS AVENUE, NORTHVALE, NJ 07647

ARMORED TUBULAR LIQUID LEVEL GAUGE
W. 90° CONN. (OUTLINE DRAWING) SERIES
LG2-T-M WITH FNPT PROCESS CONNECTIONS

DATE: 12/11/06	SHEET: 1 OF 1	DRAWING NUMBER
DRN. BY: RPS	CHKD. BY: DS	LG2-T-F
SCALE: NTS	REVISION:	